Data Sheet

Article number: 20343140M12KS
Description: E+G levelling foot
GN 343.1-40-M12-KS

Measures

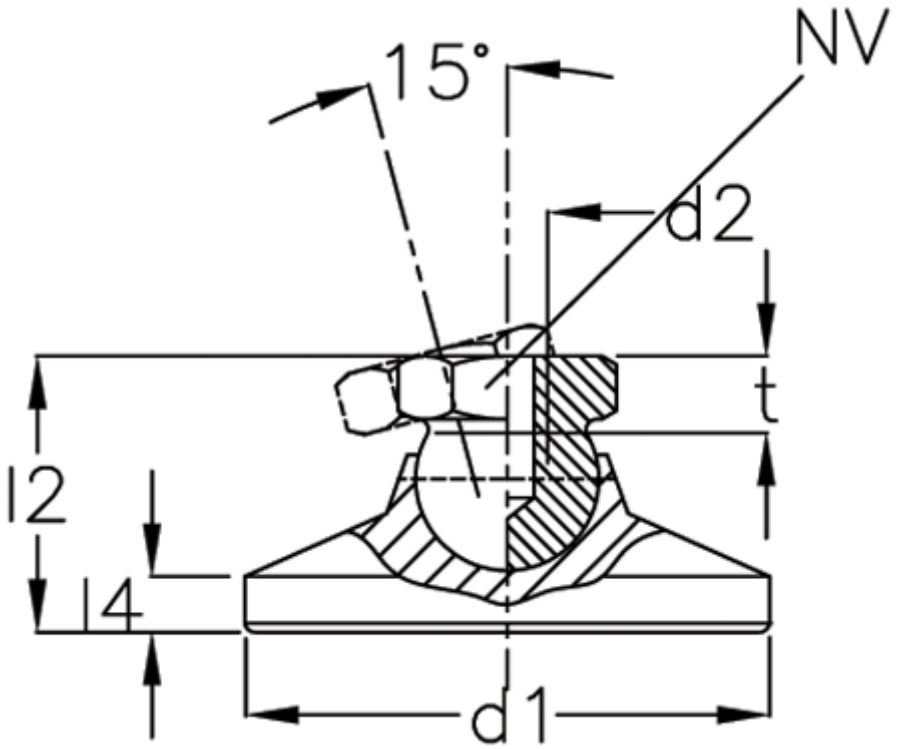

d1	= 40
d2	= 12
l2	= -
l4	= -
NV	= 17
Static load (kN)	= 33
t min	= 11.5

Product drawings and brochures of any kind may contain errors for which Brd. Klee A/S cannot be liable.